Cat.6 UTP Plug Termination Instruction

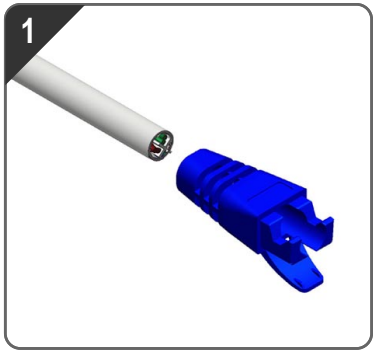

■ Install the boot first.

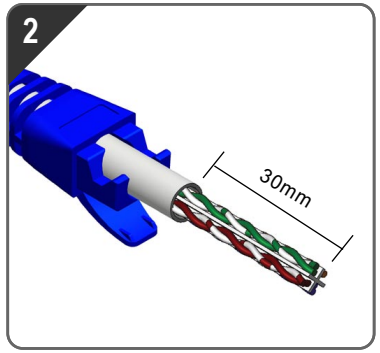

■ Strip 30mm of cable jacket.

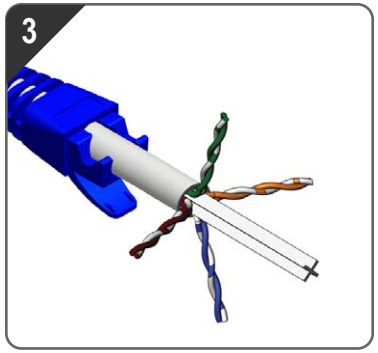

■ Separate 4 pairs.

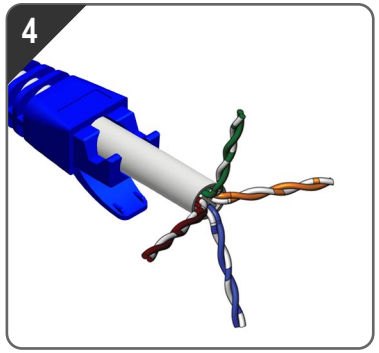

■ Cut wires separator to the root.

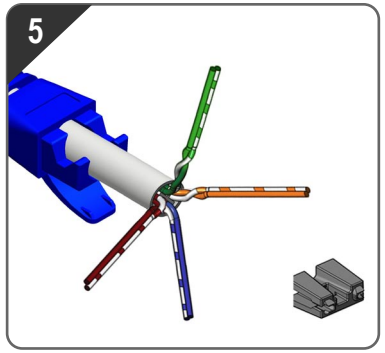

■ Untwist 4 pairs.

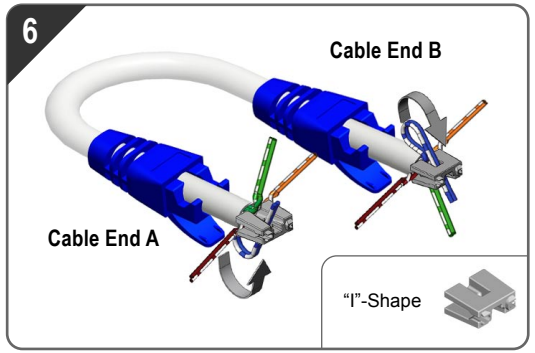

■ Insert blue-pair 4&5 to "I"-shape organizer tunnel.

Note: 1. If blue-pair 4&5 be parallel, insert to organizer directly.
2. If blue-pair 4&5 be cross, twist with force insert paralled to organizer.
3. Organizer top-bottom direction is opposite in both ends.

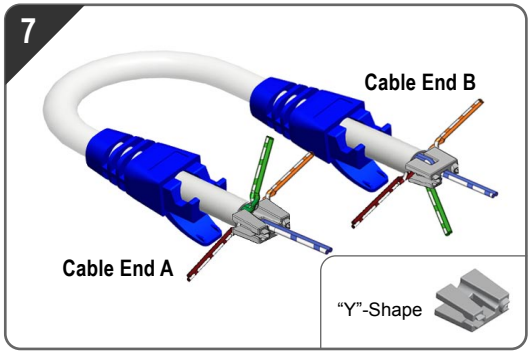

■ lay green-pair3&6 direction to "Y"-shape organizer slot, twist green wires at least 1/2 to 1 turn.

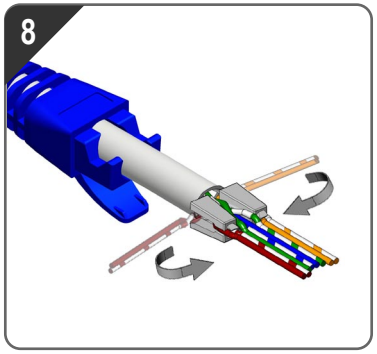

■ Insert pair 1&2, 7&8 at least 1/2 to 1 turn inside the organizer slots.

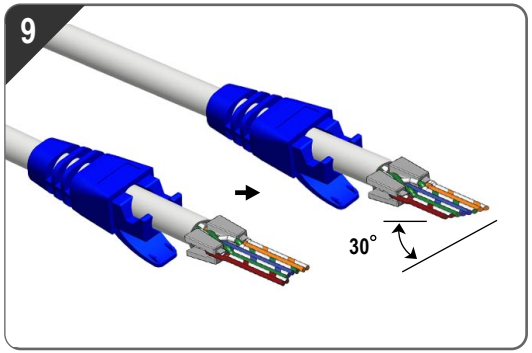

■ Comb the wires and cut from top in 30 degree.

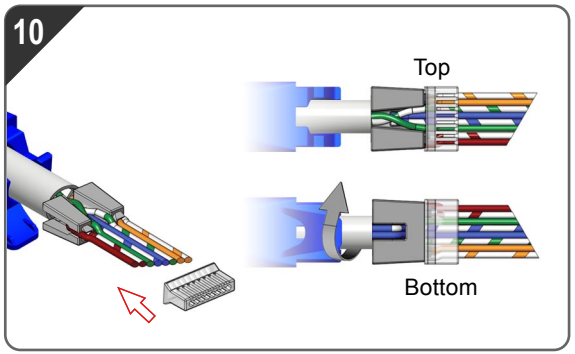

■ Thread loadbar.

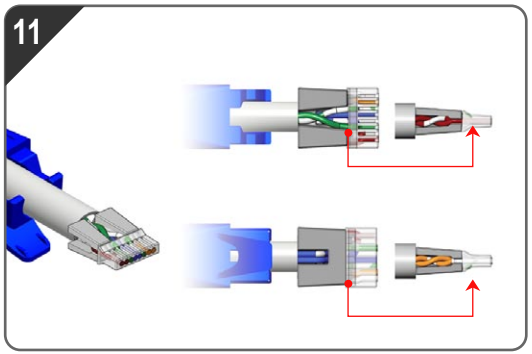

■ Note2: Pair 3&6, 1&2, 7&8 must be twisted at least 1/2 -1 turn pair 4-5 must be parallel.

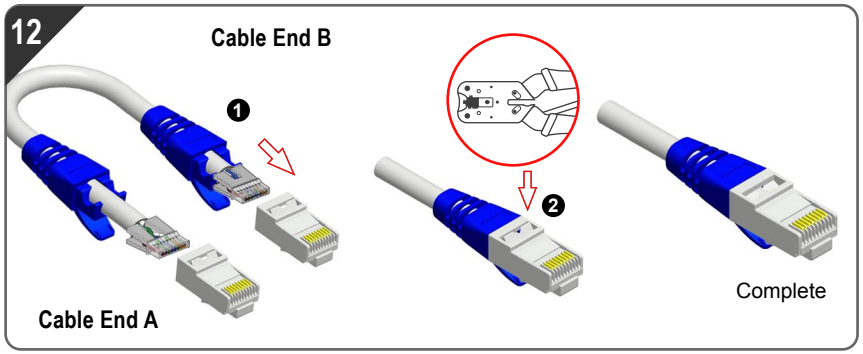

■ Note3: Wired-organizers has two directions for both ends.

■ Fasten boot into plug first then crimp and terminate the wires.